Note:
1. Overlay board material: Steel.
2. Arch material: Molded Polyurethane
3. Overlay board width: 4 inches.
4. Customer responsible to verify all field dimentions.

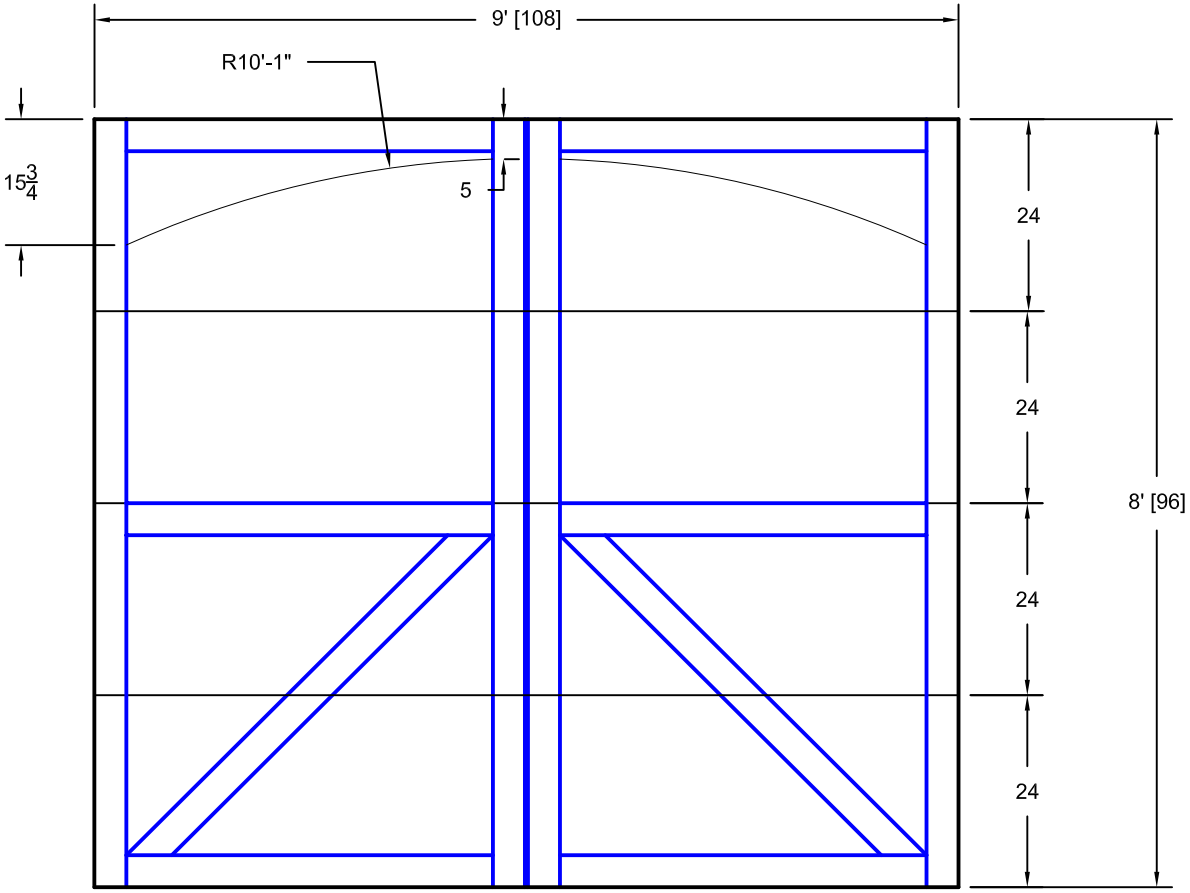

CUSTOMER APPROAL REQUIRED FOR MANUFACTURING

X_____

DRAWN BY DATE	E Gebhard 03-09-06	TITLE	Bradford w / Solid Arch B11 9' X 8'		
CHECKED DATE					
APPD DATE		SIZE A	7B098011		REV A
APPD DATE					
APPD DATE		SCALE	WT. ACT.	SHEET	

Unless Otherwise Specified Dimentions are in Inches
Tolerance on

Fractions	Decimals	Angles
+/- 1/16	X.X +/- .03 X.XX +/- .01 X.XXX +/- .005	+/- 0.5

1ST UNITED DOOR TECHNOLOGIES
7255 S. KYRENE
SUITE #104
TEMPE, AZ 85283
480-705-6632
480-705-8497 fax
www.firstudt.com